Spectrol PRECISION POTENTIOMETERS

**1-5/16 INCH**
**SINGLE-TURN**
**WIREWOUND, CONDUCTIVE PLASTIC, CERMET**

# MODELS 132, 138, 139

5Ω to 2 Megohms

- **CHOICE OF THREE ELEMENTS FOR BROAD RESISTANCE RANGE**
- **CENTER TAP AVAILABLE**
- **CONTINUOUS ROTATION & MECHANICAL STOPS BOTH STANDARD**
- **HIGH POWER RATING (139)**

ACTUAL SIZE

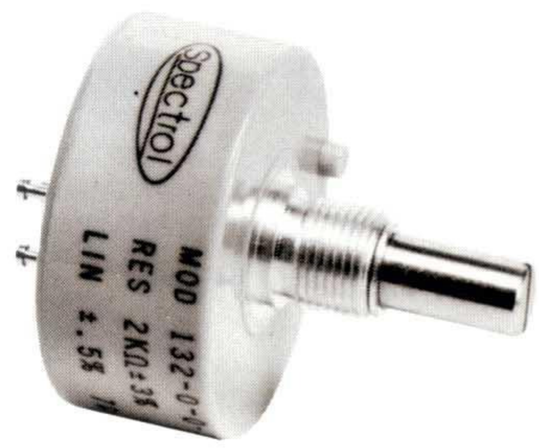


**Models 132, 138, 139**
**Bushing Mount**

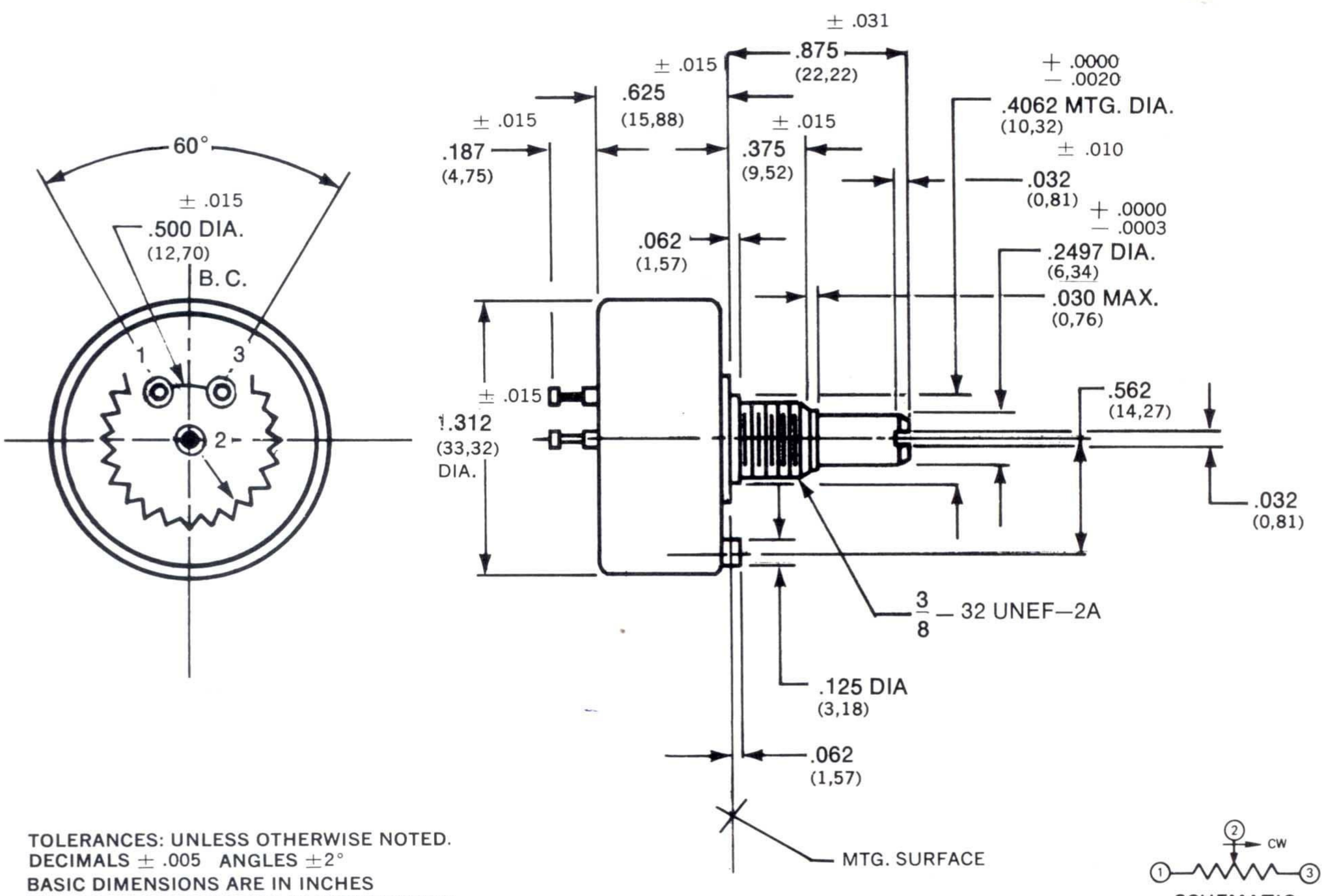


TOLERANCES: UNLESS OTHERWISE NOTED.
DECIMALS ± .005 ANGLES ±2°
BASIC DIMENSIONS ARE IN INCHES
MILLIMETER DIMENSIONS IN PARENTHESIS

# MODELS 132, 138, 139

PRECISION POTENTIOMETERS

## SPECIFICATIONS

**(MIL-R-12934 and MIL-R-39023 Test Procedures Apply)**

(Unless otherwise noted, specifications are applicable to all models)

### ELECTRICAL

**TOTAL RESISTANCE**

Model 132 Wirewound
Standard Range: 5Ω to 20KΩ, Special to 35KΩ

| Tolerance: | Standard | Special |
|---|---|---|
| 50Ω and above: | ±3% | ±1% |
| Below 50Ω | ±5% | ±3% |

Model 138 Conductive Plastic
Standard Range: 1KΩ to 50KΩ
Tolerance Standard: ±10%
Special to ±5%

Model 139 Cermet
Standard Range: 500Ω to 2 megohms
Tolerance Standard: ±20%
Special to ±5%

**LINEARITY (INDEPENDENT)**

| (132) Total Resistance | Standard | Best Practical |
|---|---|---|
| 5Ω to 20Ω | ±1.0% | ±0.75% |
| 20Ω to 200Ω | ±1.0% | ±0.50% |
| 200Ω and above | ±0.5% | ±0.25% |
| (138) | ±0.5% | ±0.25% |
| (139) | ±2.0% | ±0.50% |

**NOISE** (132) 100 ohms ENR

**OUTPUT SMOOTHNESS** (138 & 139) 0.1% maximum

**POWER RATING @ 40°C AMBIENT**

| Model 132 | Model 138 | Model 139 |
|---|---|---|
| 2.75 watts | 2 watts | 5 watts |

All Models derated to zero at 125°C

| ROTATION, | Model 132 | Model 138 | Model 139 |
|---|---|---|---|
| (CONTINUOUS) | 352°±2° | 345°±4° | 345°±4° |
| (STOPS) | 336°±2° | 336°±4° | 336°±4° |

**INSULATION RESISTANCE** 1000 megohms min., 500 VDC

**DIELECTRIC STRENGTH** 1000 volts RMS, 60 Hz

**ABSOLUTE MINIMUM RESISTANCE** 1.0% of total resistance or 0.5Ω whichever is greater (132 only)

**MINIMUM VOLTAGE** 0.5% maximum

**TEMPERATURE COEFFICIENT OF RESISTANCE** (132) refer to standard resistance element data
(138) ±500 PPM/°C maximum
(139) ±100 PPM/°C maximum

### MECHANICAL

**ROTATION** 360° continuous; 340° ±5° Stops

**BEARING TYPE** Sleeve

**TORQUE (MAXIMUMS) OZ-IN (gm-cm)** Starting: 1.0 (72 gm-cm)
Running: 0.7 (50,40 gm-cm)

**RUNOUTS (MAXIMUMS)**

| | | |
|---|---|---|
| Shaft | T.I.R. | .002 (0,05) |
| Pilot dia. | T.I.R. | .003 (0,08) |
| Lateral | T.I.R. | .005 (0,13) |
| Shaft end play | | .008 (0,20) |
| Shaft radial play | | .003 (0,08) |

**WEIGHT** 1.0 oz. maximum (28,35 gm)

**STOP STRENGTH** 8.0 in-lbs. (9,21 kgm-cm) (Stop Version Only)

### MATERIALS

**HOUSING** Molded glass filled thermoplastic
**REAR LID** Glass filled thermoset plastic
**SHAFT** Stainless steel, non magnetic, passivated
**TERMINALS** Brass, plated for solderability
**MOUNTING HARDWARE** Lockwasher: internal tooth, steel, nickel plated
Panel nut: brass, nickel plated

### ENVIRONMENTAL

**VIBRATION** 15 G thru 2000 Hz
**SHOCK** 50G
**SALT SPRAY** 48 hours
**ROTATIONAL LIFE** Shaft Revolutions:

| | |
|---|---|
| Model 132 | 500,000 |
| Model 138 | 2 million |
| Model 139 | 2 million |

**TEMPERATURE RANGE** −55°C to +125°C
MOISTURE RESISTANT

### MARKING

Units shall be marked with Spectrol name, model number, resistance and tolerance, linearity, terminal identification, and date code.

Applicable test procedures: Model 132, MIL-R-12934; Model 138 & 139. MIL-R-39023.

## POWER RATING CHART

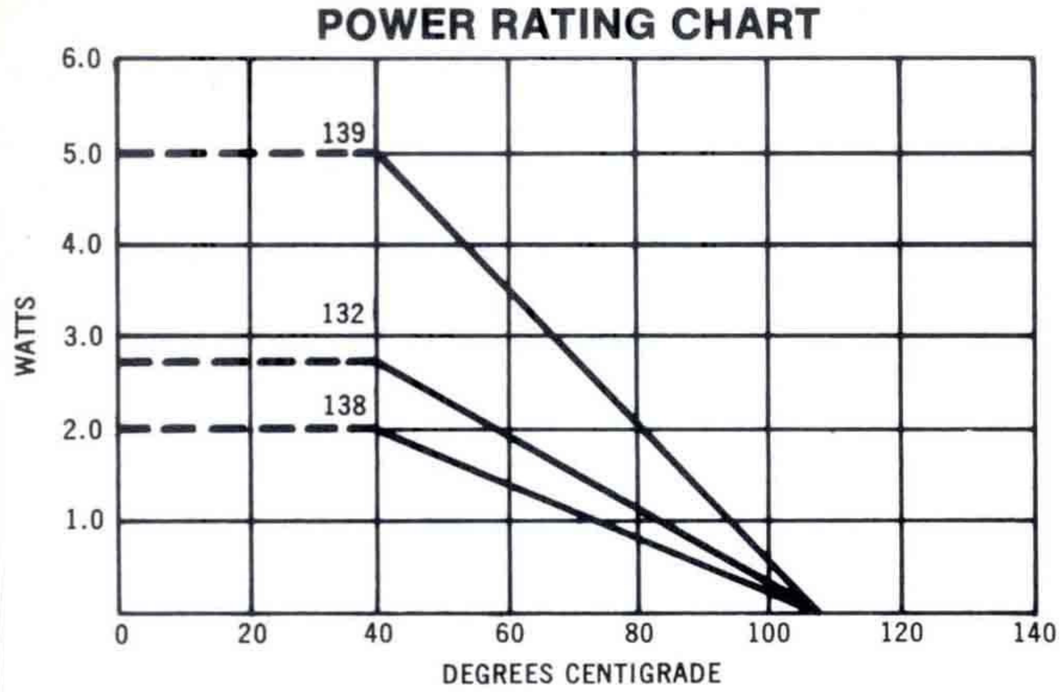


## RESISTANCE ELEMENT DATA

**FOR 132-0-X-XXX MODELS ONLY**

| RESISTANCE VALUES (ohms) | RESO-LUTION (%) | OHMS PER TURN | MAX CURRENT AT 40°C AMBIENT (milliamps) | MAX VOLTAGE ACROSS COIL (volts) | WIRE TEMP COEF (PPM/°C) |
|---|---|---|---|---|---|
| 5 | .419 | .021 | 742 | 3.71 | 800 |
| 10 | .327 | .032 | 524 | 5.24 | 800 |
| 20 | .280 | .056 | 371 | 7.42 | 800 |
| 50 | .290 | .145 | 234 | 11.7 | 20 |
| 100 | .251 | .251 | 166 | 16.6 | 20 |
| 200 | .212 | .424 | 122 | 24.4 | 20 |
| 500 | .161 | .806 | 74.2 | 37.1 | 20 |
| 1K | .150 | 1.50 | 52.4 | 52.4 | 20 |
| 2K | .132 | 2.64 | 37.1 | 74.2 | 20 |
| 5K | .107 | 5.34 | 23.4 | 117 | 20 |
| 10K | .080 | 7.98 | 16.6 | 166 | 20 |
| 20K | .067 | 13.4 | 12.2 | 244 | 20 |
| 35K | .057 | 20.0 | 8.88 | 311 | 20 |

## HOW TO ORDER THE MODELS 132, 138, 139

The Models 132, 138 and 139 can be ordered from this specification sheet by stating:

Example: **139 — 0 — 0 — 203**

**MODEL NUMBER**
**132, 138 or 139**

**MECHANICAL OPTIONS**
0. Continuous
2. Stops

**OTHER OPTIONAL FEATURES**
0. Standard (End Taps)
1. Center Tap (Within 5° of Electrical Center)

**RESISTANCE CODE**
**2 0 3**
- 3 — Number of zero's
- 0 — 2nd significant digit
- 2 — 1st significant digit

Other characteristics will be standard as described on this specification sheet. If special characteristics are required such as: special linearity tolerance, special resistance tolerance, non-linear functions, etc., please state these on your order.


UNITED TECHNOLOGIES
HAMILTON STANDARD
CONTROLS

**Spectrol Electronics**
17070 E. Gale Avenue
City of Industry, CA 91745, U.S.A.
(818) 964-6565 • TWX (910) 584-1314
FAX 818/810-1093

**Spectrol Reliance Ltd.**
Drakes Way
Swindon, Wiltshire, England
Swindon 21351 • TELEX: 44692
FAX 011-44-793-39255




See page 125, headed "Warranty" the contents of which are made a part hereof and included herein by reference.

Spectrol

PRECISION POTENTIOMETERS

7/8-INCH
SINGLE-TURN
CONDUCTIVE PLASTIC

# MODEL 157

1KΩ to 50KΩ

- RUGGED, HIGH-QUALITY, ALL-METAL HOUSING
- SHORT-LENGTH BEHIND PANEL (11/32″)

ACTUAL SIZE

**Model 157**
**Bushing Mount**

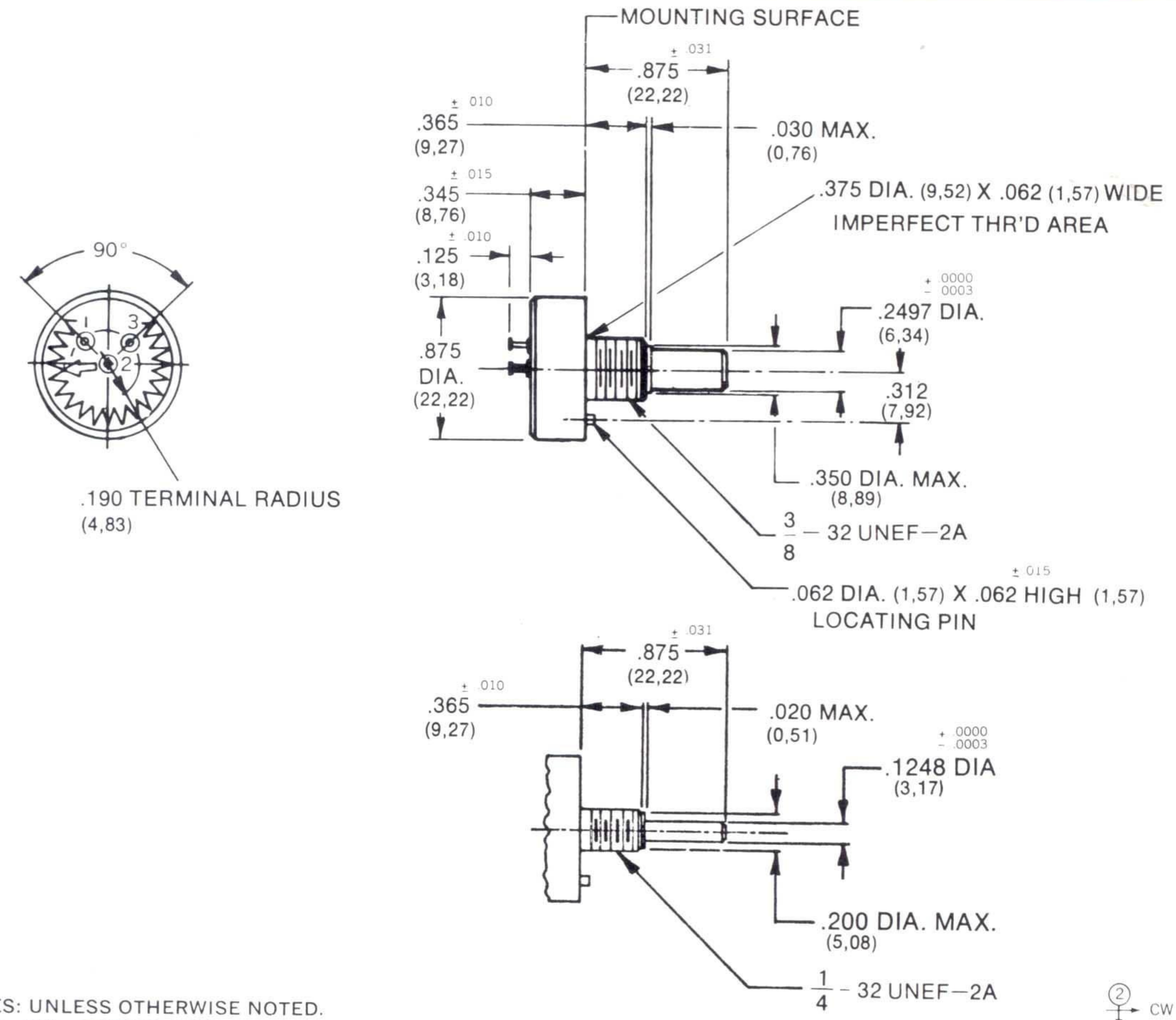


TOLERANCES: UNLESS OTHERWISE NOTED.
DECIMALS ± .005 ANGLES ±2°
BASIC DIMENSIONS ARE IN INCHES
MILLIMETER DIMENSIONS IN PARENTHESES

# MODEL 157

PRECISION POTENTIOMETERS

## SPECIFICATIONS (MIL-R-39023 Test Procedures Apply)

### ELECTRICAL

| | |
|---|---|
| TOTAL RESISTANCE | Standard Range: 1KΩ to 50KΩ<br>Tolerance:<br>Standard ± 20%<br>Special to ± 5% |
| LINEARITY (INDEPENDENT) | Standard ±2.0%<br>Special to ±.25% |
| OUTPUT SMOOTHNESS | 0.1% maximum |
| POWER RATING (@ 40°C AMBIENT) | 1 watt derated to zero at 125°C |
| ROTATION | 340° ±4° |
| INSULATION RESISTANCE | 1000 megohms min., 500 VDC |
| DIELECTRIC STRENGTH | 1000 volts RMS, 60 Hz |
| MINIMUM VOLTAGE | 0.5% maximum |
| TEMPERATURE COEFFICIENT OF RESISTANCE | ±600 PPM/°C maximum |

### MECHANICAL

| | |
|---|---|
| ROTATION | 360° continuous |
| BEARING TYPE | Sleeve Bearing |
| TORQUE (MAXIMUMS) oz-in (gm-cm) | Starting .30 (21,60) Running .25 (18,80) |
| MECHANICAL RUNOUTS (MAXIMUMS) | Shaft runout .002 (0,05)<br>Lateral runout .005 (0,13)<br>Shaft end play: .010 (0,25)<br>Shaft radial play: .003 (0,08) |
| WEIGHT | 0.5 oz. maximum (14,18 gm) |

### MATERIALS

| | |
|---|---|
| HOUSING | Aluminum, anodized |
| SHAFT | Stainless steel, non-magnetic, passivated |
| REAR LID | Molded glass filled plastic |
| TERMINALS | **Brass, plated for solderability** |
| BUSHING MOUNT HARDWARE | Lockwasher: internal tooth, steel, nickel plated<br>Panel nut: brass, nickel plated |

### ENVIRONMENTAL

| | |
|---|---|
| VIBRATION | 15 G thru 2000 Hz |
| SHOCK | 50G |
| SALT SPRAY | 96 hours |
| ROTATIONAL LIFE | 2 million Shaft Revolutions |
| LOAD LIFE | 900 hours |
| TEMPERATURE RANGE | −55° C to +125°C |
| MOISTURE RESISTANT | |

### MARKING

Units shall be marked with Spectrol name, model number, resistance and tolerance, linearity, terminal identification, and date code.

## POWER RATING CHART

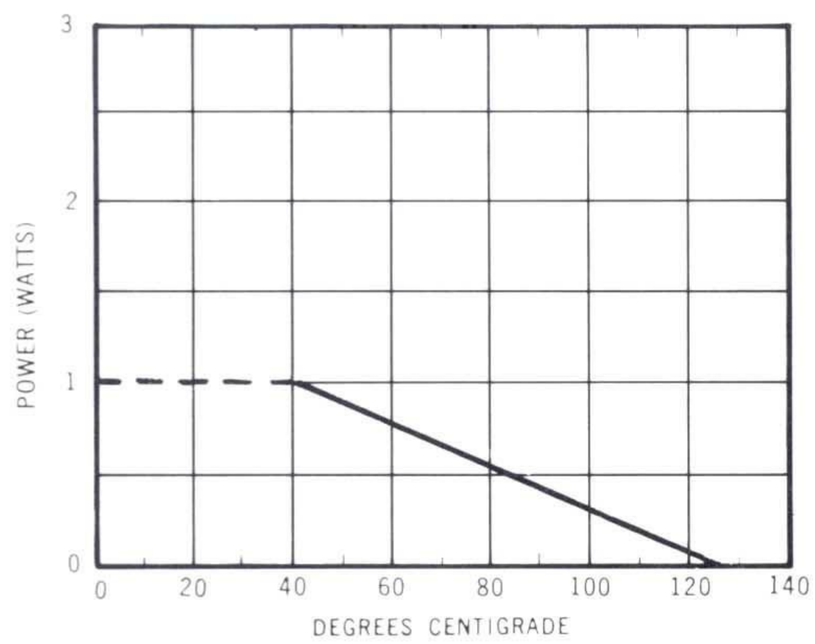


## RESISTANCE ELEMENT DATA

| RESISTANCE VALUE (OHMS) | MAXIMUM VOLTAGE ACROSS ELEMENT (VOLTS) |
|---|---|
| 1K | 32 |
| 2K | 45 |
| 5K | 71 |
| 10K | 100 |
| 20K | 141 |
| 50K | 224 |

## HOW TO ORDER THE MODEL 157

The Model 157 can be ordered from this specification sheet with a variety of alternate characteristics, as shown above. For most rapid service on your order, please state:

1. Model Number, 157 — Example — Model 157, ¼ shaft, ⅜-32 bushing, 10K
2. Shaft and Bushing size — Example — Model 157, ⅛ shaft ¼-32 bushing, 5K
3. The total resistance

Other characteristics will be standard as described above. If special characteristics are required, such as: special linearity and resistance tolerance, high torque, etc., state these on your order.


UNITED TECHNOLOGIES
HAMILTON STANDARD
CONTROLS

**Spectrol Electronics**
17070 E. Gale Avenue
City of Industry, CA 91745, U.S.A.
(818) 964-6565 • TWX (910) 584-1314
FAX 818/810-1093

**Spectrol Reliance Ltd.**
Drakes Way
Swindon, Wiltshire, England
Swindon 21351 • TELEX: 44692
FAX 011-44-793-39255


See page 125, headed "Warranty" the contents of which are made a part hereof and included herein by reference.

43

**Spectrol** PRECISION POTENTIOMETERS

**BOSCO MARCO EREDI** S.r.l.
VIA P. SACCHI, 22
10128 TORINO
TEL. 011.562.99.50
FAX 011.562.52.75

**7/8 INCH**
**THREE, FIVE, AND TEN-TURN**
**WIREWOUND**

# MODELS 533, 534, 535

3-turn 533 50Ω to 20KΩ 5-turn 535 50Ω to 50KΩ 10-turn 534 100Ω to 100KΩ

- 3/4-INCH LENGTH
- HIGH POWER RATING
- 2-GANG UNIT AVAILABLE AS STANDARD
- RUGGED INTEGRATED CONSTRUCTION
- EXTRA-TAP OPTIONS
- SUPERIOR STOP STRENGTH

ACTUAL SIZE

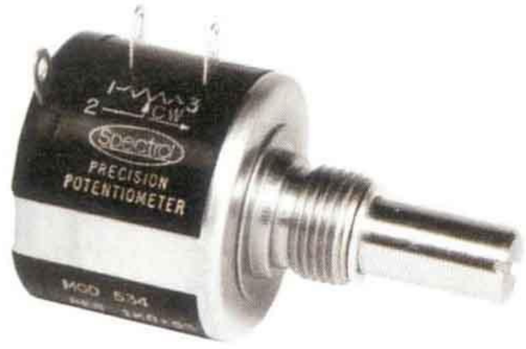


**Models 533, 534, 535**
**Bushing Mount**
**Single Section**

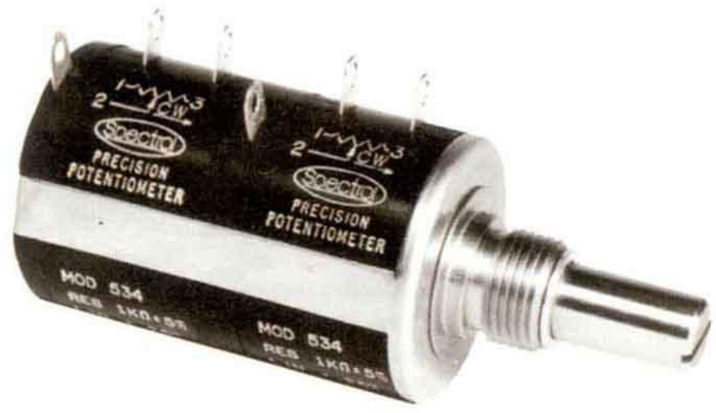


**Models 533, 534, 535**
**Bushing Mount**
**Two Section**

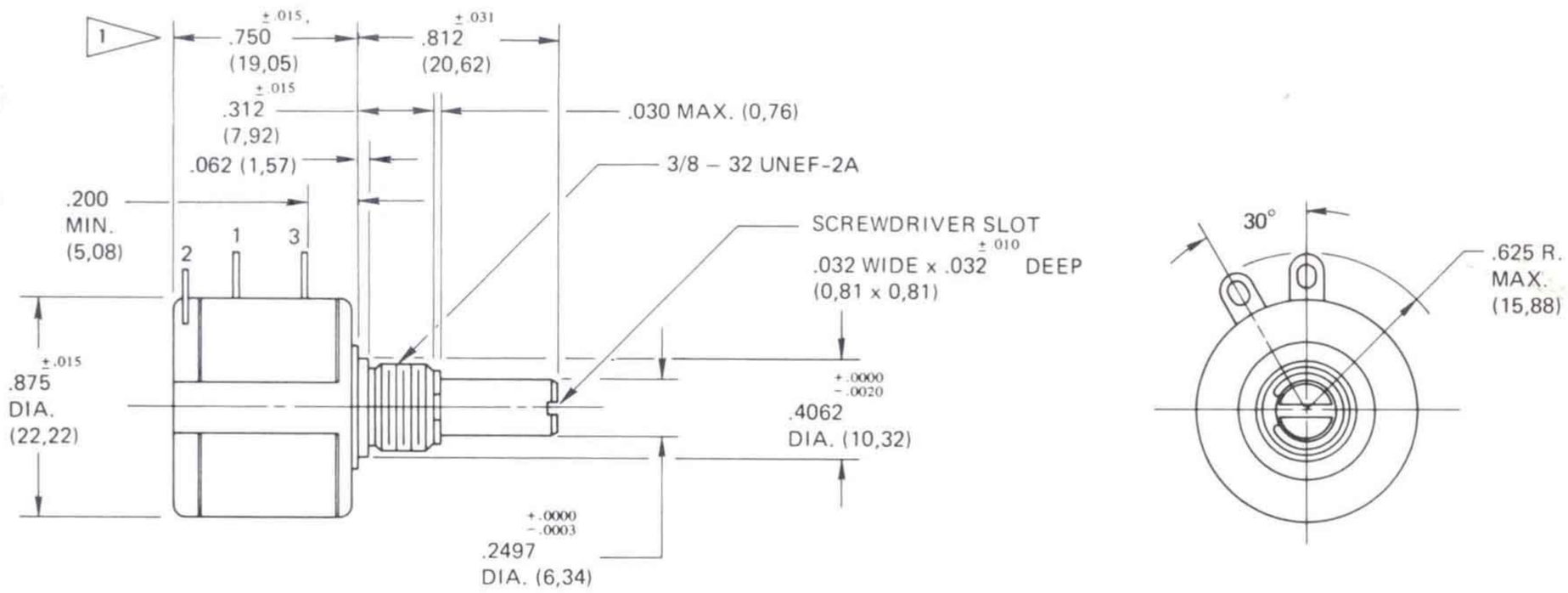


**BUSHING MOUNT**

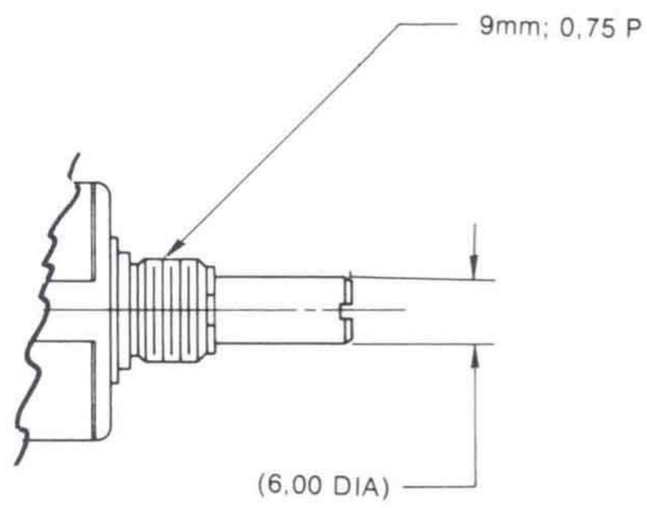


**METRIC SHAFT/BUSHING THREAD**

TOLERANCES: UNLESS OTHERWISE NOTED.
DECIMALS ±.005 ANGLES ±2°
BASIC DIMENSIONS ARE IN INCHES
MILLIMETER DIMENSIONS IN PARENTHESES

1 ADD .695 (17,65) FOR 2 SECTION UNIT

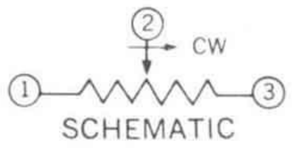

# MODELS 533, 534, 535

PRECISION POTENTIOMETERS

BOSCO
MARCO EREDI s.r.l.

## SPECIFICATIONS (Unless otherwise noted, specifications are applicable to all models)

### ELECTRICAL

| | | |
|---|---|---|
| TOTAL RESISTANCE | MODEL 533 | Range (ohms) 5 to 60K<br>Standard values (ohms) 50 to 20 K<br>Standard tolerance: ±5% Special to: ±2% |
| | MODEL 534 | Range (ohms) 10 to 200K<br>Standard values (ohms) 100 to 100 K<br>Standard tolerance: ±5% Special to: ±1% |
| | MODEL 535 | Range (ohms) 5 to 100K<br>Standard values (ohms) 50 to 50K<br>Standard tolerance: ±5% Special to: ±2% |
| LINEARITY (INDEPENDENT) | ±0.25% | |
| NOISE | 100 ohms ENR | |
| ROTATION | MODEL 533 | 1080° + 10° – 0° |
| | MODEL 534 | 3600° + 10° – 0° |
| | MODEL 535 | 1800° + 10° – 0° |
| POWER RATING (@ 70°C) | MODEL 533 | 1.0 watt |
| | MODEL 534 | 2.0 watts |
| | MODEL 535 | 1.5 watts |
| | All units derated to zero at 125°C | |
| | Additional sections: 75% of section 1 | |
| INSULATION RESISTANCE | 1000 megohms min., 500 vdc | |
| DIELECTRIC STRENGTH | 1000 volts rms min., 60 Hz | |
| ABSOLUTE MIN. RESISTANCE | Not to exceed linearity x total resistance or 1Ω, whichever is greater | |
| TEMPCO | 20 PPM/°C (standard values, wire only) | |
| END VOLTAGE | 0.25% of total applied voltage, maximum | |
| PHASING | CCW end points–section 2 phased to section 1 within ±2° | |
| TAPS | Center tap only | |

### MARKING

Units shall be marked with Spectrol name and model No., resistance and tolerance, linearity, terminal identification and date code

### MECHANICAL

| | | |
|---|---|---|
| ROTATION | MODEL 533 | 1080° + 10° – 0° |
| | MODEL 534 | 3600° + 10° – 0° |
| | MODEL 535 | 1800° + 10° – 0° |

### MECHANICAL (Cont.)

BEARING TYPE ..... Bushing: sleeve bearing

TORQUE (MAXIMUMS) (BUSHING AND SERVO MOUNT) OZ-IN. (GM-CM)

| | Starting 534 | Starting 533,535 |
|---|---|---|
| 1 Section | 0.5 (36) | 0.7 (50) |
| 2 Section | 0.9 (65) | 1.1 (79) |

MECHANICAL RUNOUTS (MAXIMUMS)

| | Bushing |
|---|---|
| Shaft runout (TIR/IN): | .003 (0,08) |
| Pilot dia. runout (TIR): | .003 (0,08) |
| Lateral runout (TIR): | .005 (0,13) |
| Shaft end play: | .010 (0,25) |
| Shaft radial play: | .003 (0,08) |

| | | |
|---|---|---|
| WEIGHT (MAXIMUMS) | 1 Section | 0.75 oz (21.26 gm) |
| | 2 Section | 1.25 oz (35.44 gm) |
| STOP STRENGTH | 75 oz-in. (static) (5.4 Kgm cm) | |
| GANGING | 2 sections maximum | |

### ENVIRONMENTAL

| | | | |
|---|---|---|---|
| VIBRATION | 15g thru 2000 Hz | | |
| SHOCK | 50g | | |
| ROTATIONAL LIFE (SHAFT REVOLUTIONS) | 533<br>300,000 | 534<br>1,000,000 | 535<br>500,000 |
| LOAD LIFE | 900 hours | | |
| TEMPERATURE RANGE | –55°C to +125°C | | |
| MOISTURE RESISTANT | | | |
| SALT SPRAY | 96 hours | | |

### MATERIALS

| | |
|---|---|
| FRONT LID | Stainless steel, nickel plated brass (bushing) |
| HOUSING | Molded glass filled thermoset plastic |
| REAR LID | Molded glass filled thermoplastic |
| SHAFT | Stainless steel, non-magnetic, passivated |
| TERMINALS | Brass, plated for solderability |
| MOUNTING HARDWARE | Lockwasher: internal tooth, steel, nickel plated<br>Panel nut :brass, nickel plated |

## POWER RATING CHART

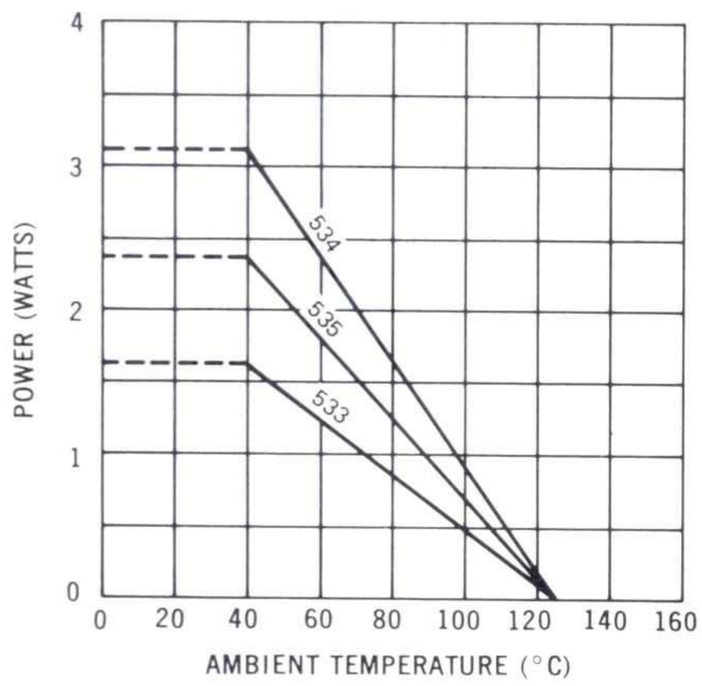


## RESISTANCE ELEMENT DATA

| RESISTANCE VALUES (OHMS) | | | RESOLUTION % | | | OHMS PER TURN | | | MAX CURRENT AT 70°C AMBIENT (MILLIAMPS) | | | MAX VOLTAGE ACROSS COIL (VOLTS) | | |
|---|---|---|---|---|---|---|---|---|---|---|---|---|---|---|
| 533 | 534 | 535 | 533 | 534 | 535 | 533 | 534 | 535 | 533 | 534 | 535 | 533 | 534 | 535 |
| 50 | – | 50 | .149 | – | .120 | .0746 | – | .0603 | 141.0 | – | 173.0 | 7.07 | – | 8.66 |
| 100 | 100 | 100 | .111 | .060 | .075 | .1114 | .0603 | .0746 | 100.0 | 141.0 | 122.0 | 10.0 | 14.1 | 12.2 |
| 200 | 200 | 200 | .097 | .037 | .061 | .1954 | .0746 | .1220 | 70.7 | 100.0 | 86.6 | 14.1 | 20.0 | 17.3 |
| 500 | 500 | 500 | .069 | .031 | .049 | .3424 | .1520 | .2459 | 44.7 | 63.2 | 54.7 | 22.4 | 31.6 | 27.4 |
| 1K | 1K | 1K | .063 | .025 | .041 | .6331 | .2459 | .4113 | 31.6 | 44.7 | 38.7 | 31.6 | 44.7 | 38.7 |
| 2K | 2K | 2K | .041 | .021 | .031 | .8206 | .4113 | .6331 | 22.4 | 31.6 | 27.4 | 44.7 | 63.2 | 54.8 |
| 5K | 5K | 5K | .044 | .016 | .034 | 2.2330 | .8206 | 1.7230 | 14.1 | 20.0 | 17.3 | 70.7 | 100.0 | 86.6 |
| 10K | 10K | 10K | .034 | .017 | .030 | 3.4510 | 1.7230 | 3.0160 | 10.0 | 14.1 | 12.2 | 100.0 | 141.0 | 122.0 |
| 20K | 20K | 20K | .031 | .015 | .020 | 6.1790 | 3.0160 | 3.9910 | 7.07 | 10.0 | 8.66 | 141.0 | 200.0 | 173.0 |
| – | 50K | 50K | – | .009 | .015 | – | 4.6690 | 7.4560 | – | 6.32 | 5.47 | – | 316.0 | 274.0 |
| – | 100K | – | – | .007 | – | – | 7.4560 | – | – | 4.47 | – | – | 447.0 | – |
| – | – | – | – | – | – | – | – | – | – | – | – | – | – | – |
| – | – | – | – | – | – | – | – | – | – | – | – | – | – | – |

## HOW TO ORDER THE MODEL 533, 534, OR 535

Models can be ordered from this specification sheet by stating:

1. Model 533, 534, or 535.
2. Mounting type (bushing or Metric Shaft/thread).
3. The total resistance of each section, beginning with the section nearest the mounting end.
4. The number of sections desired.

*Example:* Model 534, Metric Shaft/thread, 10K, single section.
*Example:* Model 533, bushing, 10K/100K, 2 section.
*Example:* Model 534, bushing, 100K, single section.
*Example:* Model 535, bushing, 20K, single section.

Except where otherwise noted, all characteristics described on this sheet are standard. If special characteristics are required, please state these on your order. Some of the special features that can be provided are: extra taps, special linearity tolerance, special resistance tolerance, non-linear functions, plastic shaft or combination metal-plastic shaft, rear shaft extension, dual concentric shafts, high shaft torque, special shaft diameters, mounting configurations, non-turn pin, sealed units for high humidity applications, and ⅛ dia. shaft with ¼-32 bushing thread.

UNITED TECHNOLOGIES
HAMILTON STANDARD
CONTROLS

**Spectrol Electronics**
17070 E. Gale Avenue
City of Industry, CA 91745, U.S.A.
(818) 964-6565 • TWX (910) 584-1314
FAX 818/810-1093

**Spectrol Reliance Ltd.**
Drakes Way
Swindon, Wiltshire, England
Swindon 21351 • TELEX: 44692
FAX 011-44-793-39255



See page 125, headed "Warranty" the contents of which are made a part hereof and included herein by reference.

Spectrol PRECISION POTENTIOMETERS

**7/8 INCH THREE-TURN WIREWOUND**

# MODEL 537

50Ω to 20KΩ

ACTUAL SIZE

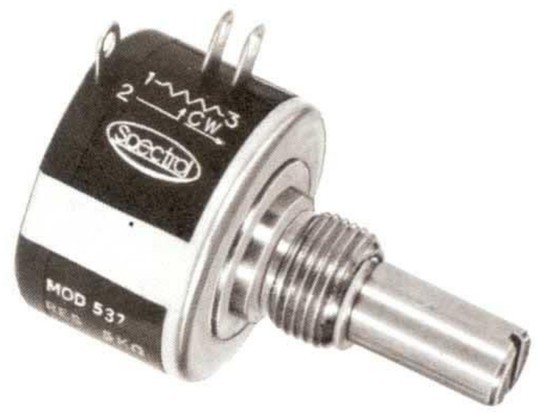


**MODEL 537**
**Bushing Mount**
**Single Section**

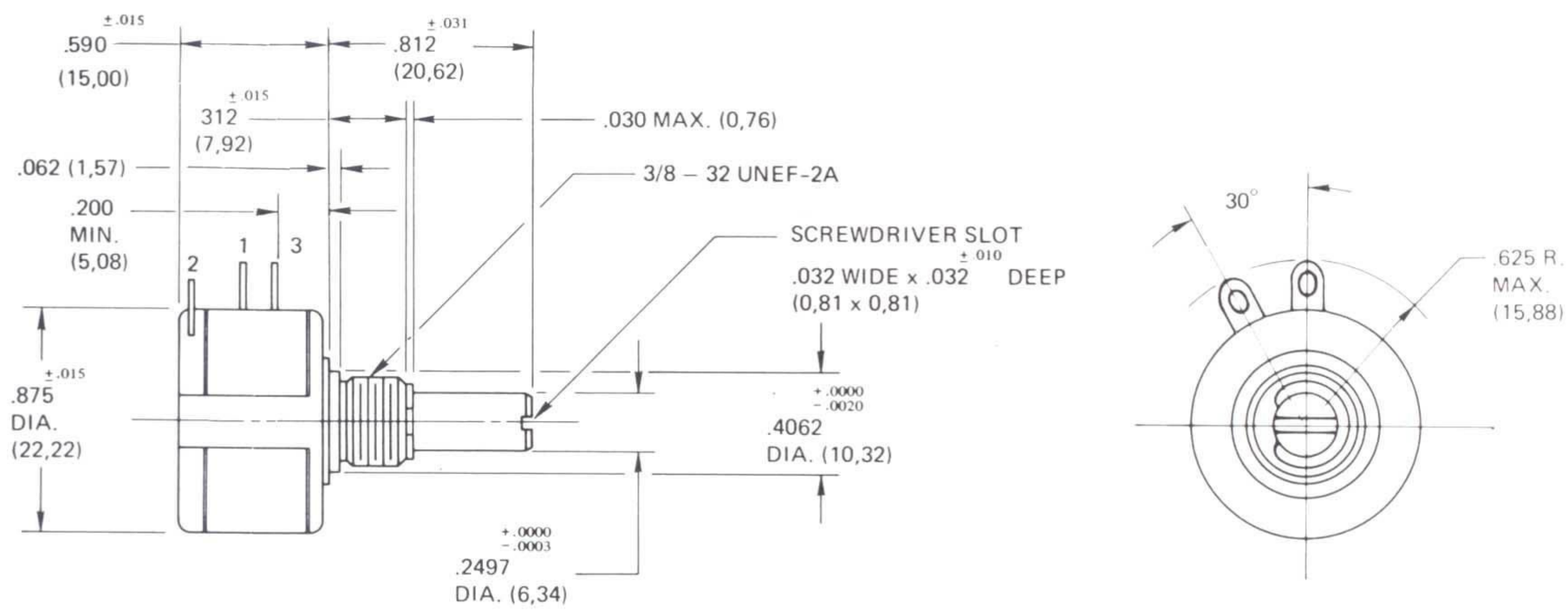


**BUSHING MOUNT**

TOLERANCES: UNLESS OTHERWISE NOTED.
DECIMALS ±.005 ANGLES ±2°
BASIC DIMENSIONS ARE IN INCHES
MILLIMETER DIMENSIONS IN PARENTHESES

1 ADD .545 (13,84) FOR 2 SECTION UNIT

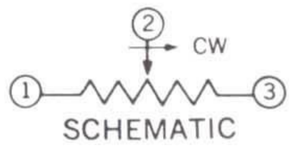


SCHEMATIC

# MODEL 537

PRECISION POTENTIOMETERS

## SPECIFICATIONS

### ELECTRICAL

| | |
|---|---|
| TOTAL RESISTANCE | Range (ohms) 5 to 60K<br>Standard values (ohms) 50 to 20K<br>Standard tolerance: ±5% Special to: ±2% |
| LINEARITY (INDEPENDENT) | ±0.25% |
| NOISE | 100 ohms ENR |
| ROTATION | 1080° + 10° − 0° |
| POWER RATING (@ 70°C) | 1.0 watt derated to zero at 125°C<br>Additional sections: 75% of section 1 |
| INSULATION RESISTANCE | 1000 megohms min., 500 vdc |
| DIELECTRIC STRENGTH | 1000 volts rms, 60 Hz |
| ABSOLUTE MIN. RESISTANCE | Not to exceed linearity x total resistance or 1Ω, whichever is greater |
| TEMPCO | 20 PPM/°C (standard values, wire only) |
| END VOLTAGE | 0.25% of total applied voltage, maximum |
| PHASING | CCW end points–section 2 phased to section 1 within ±2° |
| TAPS | center tap only |

### MECHANICAL

| | | | |
|---|---|---|---|
| ROTATION | 1080° + 10° − 0° | | |
| BEARING TYPE | Bushing: sleeve bearing | | |
| TORQUE (MAXIMUMS) OZ IN. (GM CM) | | Starting | Running |
| | 1 Section | 0.7 (50) | 0.6 (43) |
| | 2 Section | 1.1 (79) | 0.9 (65) |
| MECHANICAL RUNOUTS (MAXIMUMS) | Shaft runout (TIR/IN): | .003 (0.08) | |
| | Pilot dia. runout (TIR): | .003 (0.08) | |
| | Lateral runout (TIR): | .005 (0.13) | |
| | Shaft end play: | .010 (0.25) | |
| | Shaft radial play: | .003 (0.08) | |

### MECHANICAL (Cont.)

| | | |
|---|---|---|
| WEIGHT (MAXIMUMS) | 1 Section | 0.75 oz (21.26 gm) |
| | 2 Section | 1.25 oz (35.44 gm) |
| STOP STRENGTH | 75 oz-in. (static) (5.4 Kgm cm) | |
| GANGING | 2 sections maximum* | |

### MATERIALS

| | |
|---|---|
| FRONT LID | Stainless steel, nickel plated brass |
| HOUSING | Molded glass filled thermoset plastic |
| REAR LID | Molded glass filled nylon |
| SHAFT | Stainless steel, non-magnetic, passivated |
| TERMINALS | Brass, plated for solderability |
| MOUNTING HARDWARE | Lockwasher: internal tooth, steel, nickel plated<br>Panel nut: brass, nickel plated |

### ENVIRONMENTAL

| | |
|---|---|
| VIBRATION | 15g thru 2000 Hz |
| SHOCK | 50g |
| ROTATIONAL LIFE (SHAFT REVOLUTIONS) | 300,000 |
| LOAD LIFE | 900 hours |
| TEMPERATURE RANGE | −55°C to +125°C |
| MOISTURE RESISTANT | |
| SALT SPRAY | 96 hours |

### MARKING

Units shall be marked with Spectrol name and model No., resistance and tolerance, linearity, terminal identification nd date code

## POWER RATING CHART

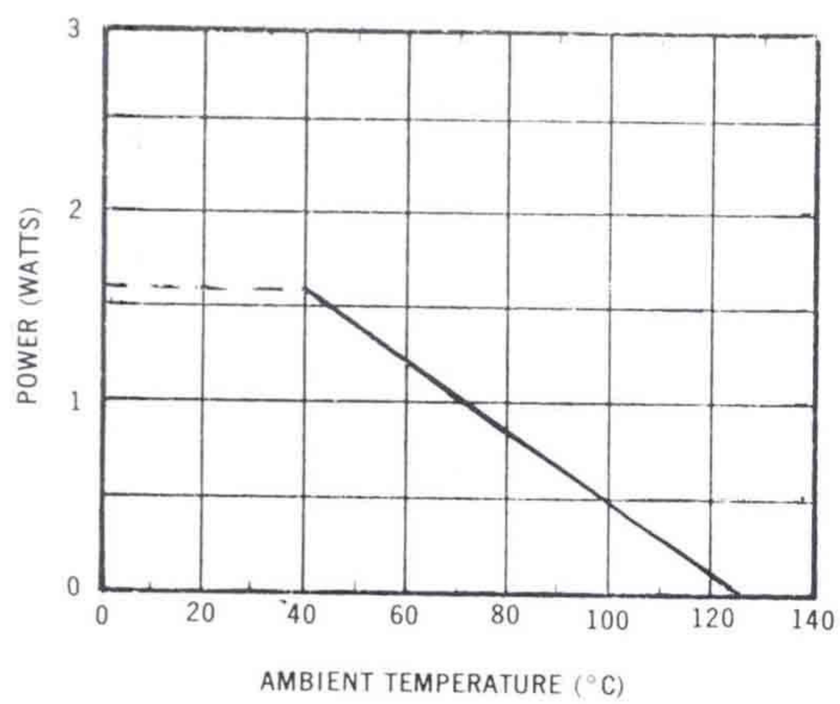


## RESISTANCE ELEMENT DATA

| RESISTANCE VALUES (ohms) | RESO-LUTION (%) | OHMS PER TURN | MAXIMUM CURRENT AT 70°C AMBIENT (milliamps) | MAXIMUM VOLTAGE ACROSS COIL (volts) | WIRE TEMP. COEF. (PPM/°C) |
|---|---|---|---|---|---|
| 5 | .152 | .0076 | 447 | 2.24 | 1300 |
| 10 | .152 | .0152 | 316 | 3.16 | 800 |
| 20 | .114 | .0227 | 224 | 4.47 | 800 |
| 25 | .100 | .0249 | 200 | 5.00 | 800 |
| 50 | .149 | .0746 | 141 | 7.07 | 20 |
| 100 | .111 | .1114 | 100 | 10.0 | 20 |
| 200 | .097 | .1954 | 70.7 | 14.1 | 20 |
| 500 | .069 | .3424 | 44.7 | 22.4 | 20 |
| 1K | .063 | .6331 | 31.6 | 31.6 | 20 |
| 2K | .041 | .8206 | 22.4 | 44.7 | 20 |
| 5K | .044 | 2.233 | 14.1 | 70.7 | 20 |
| 10K | .034 | 3.451 | 10.0 | 100.0 | 20 |
| 20K | .031 | 6.179 | 7.07 | 141.0 | 20 |

## HOW TO ORDER THE MODEL 537

Models can be ordered from this specification sheet by stating:

1. Model 537.
2. The total resistance of each section, beginning with the section nearest the mounting end.
3. The number of sections desired.

*Example:* Model 537, 10K, single section.
*Example:* Model 537, 10K/100K, 2 section.

Except where otherwise noted, all characteristics described on this sheet are standard. If special characteristics are required, please state these on your order. Some of the special features that can be provided are: special linearity tolerance, special resistance tolerance, non-linear functions, plastic shaft or combination metal-plastic shaft, rear shaft extension, dual concentric shafts, high shaft torque, special shaft diameters, mounting configurations, non-turn pin, sealed units for high humidity applications, and ⅛ dia. shaft with ¼-32 bushing thread.


UNITED TECHNOLOGIES
HAMILTON STANDARD
CONTROLS

**Spectrol Electronics**
17070 E. Gale Avenue
City of Industry, CA 91745, U.S.A.
(818) 964-6565 • TWX (910) 584-1314
FAX 818/810-1093

**Spectrol Reliance Ltd.**
Drakes Way
Swindon, Wiltshire, England
Swindon 21351 • TELEX: 44692
FAX 011-44-793-39255




See page 125, headed "Warranty" the contents of which are made a part hereof and included herein by reference.

Spectrol PRECISION POTENTIOMETERS

**1-13/16 INCH**
**THREE AND TEN-TURN**
**WIREWOUND**

# MODELS 830, 860

830: 15Ω to 50KΩ  860: 20Ω to 200KΩ

ACTUAL SIZE

**Model 830**
Three-Turn

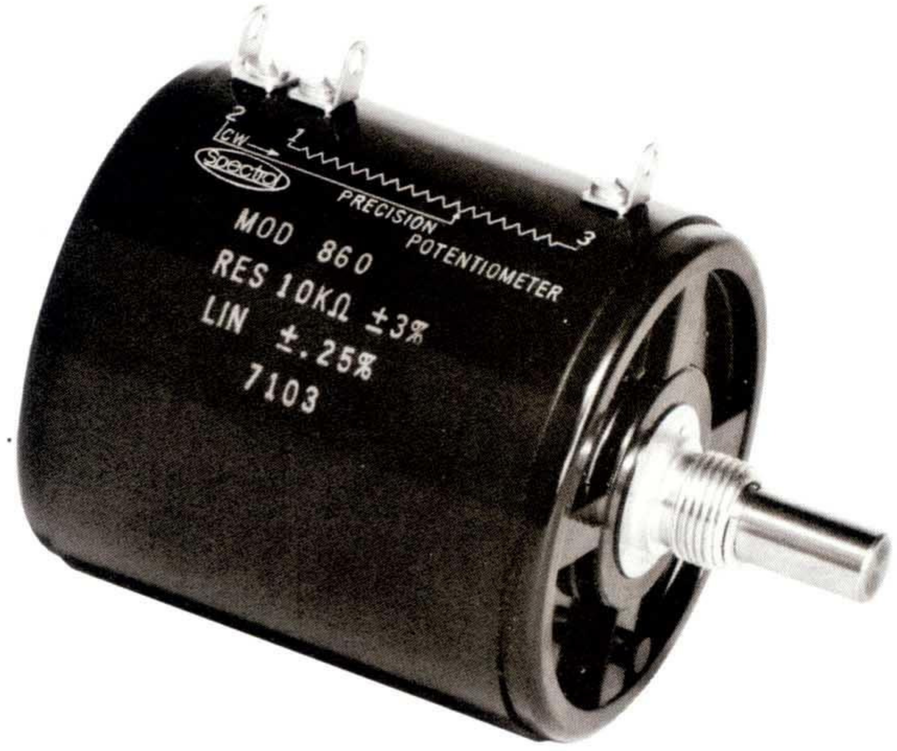


**Model 860**
Ten-Turn

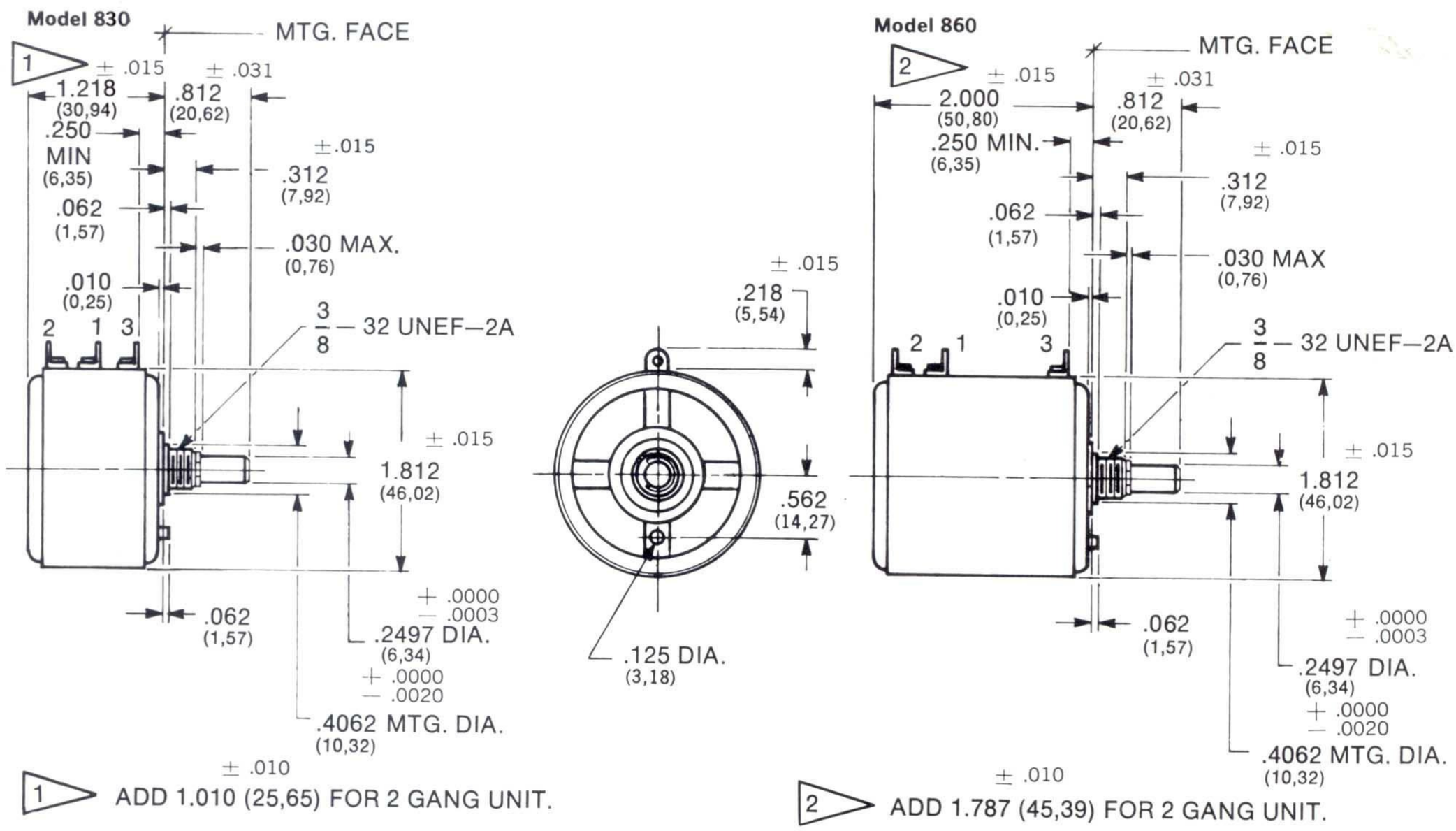


TOLERANCES: UNLESS OTHERWISE NOTED.
DECIMALS ± .005 ANGLES ±2°
BASIC DIMENSIONS ARE IN INCHES
MILLIMETER DIMENSIONS IN PARENTHESES

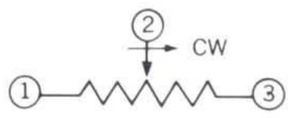


SCHEMATIC

# MODELS 830,860

PRECISION POTENTIOMETERS

## SPECIFICATIONS (MIL-R-12934 Test Procedures Apply)

(Unless otherwise noted, specifications are applicable to both 830 and 860.)

### ELECTRICAL

TOTAL RESISTANCE ..... Standard Range (830) 15Ω to 50KΩ, Special to 150KΩ
(860) 20Ω to 200KΩ, Special to 500KΩ

Tolerance:

200Ω and above: Standard ±3%, Special to ±1%
Below 200Ω: Standard ±5%, Special to ±3%

LINEARITY (INDEPENDENT) ... ±0.25% Standard

| (830) Total Resistance | Best Practical |
|---|---|
| 15Ω to 1KΩ | ±.15% |
| 1KΩ to 5KΩ | ±.10% |
| 5KΩ to 25KΩ | ±.075% |
| 25KΩ and above | ±.05% |
| (860) 20Ω to 50Ω | ±.15% |
| 50Ω to 200Ω | ±.10% |
| 200Ω to 5KΩ | ±.05% |
| 5KΩ and above | ±.025% |

NOISE ..... 100 Ohms ENR
ROTATION ..... (830) 1080° + 4° − 0°
(860) 3600° + 4° −0°
POWER RATING ..... (830) 3.0 Watts at 40°C derated to zero at 125°C
(860) 8.0 Watts at 40°C derated to zero at 125°C
INSULATION RESISTANCE .... 1,000 megohms min., 500 vdc
DIELECTRIC STRENGTH ..... 1000 volts RMS, 60 Hz
ABSOLUTE MINIMUM RESISTANCE ..... Not to exceed linearity X total resistance or 1Ω whichever is greater
END VOLTAGE ..... 0.5% of total applied voltage maximum
PHASING ..... CCW end points : sect. 2 phased to sect 1 within 1°
TAPS (EXTRA) ..... (830) 42 available as special, standard tolerance ±1°
(860) 108 available as special, standard tolerance ±1°

### MECHANICAL

ROTATION ..... (830) 1080° + 4° − 0°
(860) 3600° + 4° − 0°
BEARING TYPE ..... Sleeve Bearing
TORQUE (MAXIMUMS) oz-in (gm-cm) ..... 1 section: Starting 1.75 (126,02)
Running 1.26 (90,01)
2 section: Starting 2.55 (183,62)
Running 1.85 (133,21)
RUNOUTS (MAXIMUMS) ..... Shaft : .002 TIR (0,05)
Pilot Dia. : .002 TIR (0,05)
Lateral : .005 TIR (0,13)
Shaft End Play: .002 Min. — .010 Max. (0,05-0,25
Shaft Radial Play: .003 Max. (0,08)
WEIGHT (MAXIMUM) oz (gm) ... (830) Single Section 3.0 (85,05)
Addition Section 2.5 (70,80)
(860) Single Section: 4.5 (127,58)
Additional Section 4.0 (113,40)
STOP STRENGTH ..... 750 oz-in (Static) (54,01 kgm-cm)
GANGING ..... 2 sections Max., ears of clamp band between sections positioned 45° ± 10° CCW from terminal center line
MOMENT OF INERTIA ..... (830) 5.5 gm-cm² Max
(860) 15.0 gm-cm² Max

### MATERIALS

BUSHING ..... Aluminum, nickel plated
HOUSING AND FRONT LID .... Molded glass filled thermoset plastic
REAR LID ..... Molded glass filled nylon
SHAFT ..... Stainless steel, non magnetic, passivated
TERMINALS ..... Brass, plated for solderability
MOUNTING HARDWARE ..... Lockwasher: internal tooth, steel, nickel plated
Panel nut: brass, nickel plated

### ENVIRONMENTAL

VIBRATION ..... 10G thru 500 CPS
SHOCK ..... 50 G
ROTATIONAL LIFE ..... 500,000 shaft revolutions
LOAD LIFE ..... 900 hours
TEMPERATURE RANGE ..... −55°C to +125°C
MOISTURE RESISTANT
SALT SPRAY ..... 48 hours

### MARKING

Units shall be marked with Spectrol name and Model No., resistance and resistance tolerance, linearity, terminal identification, and date code.

## POWER RATING CHART

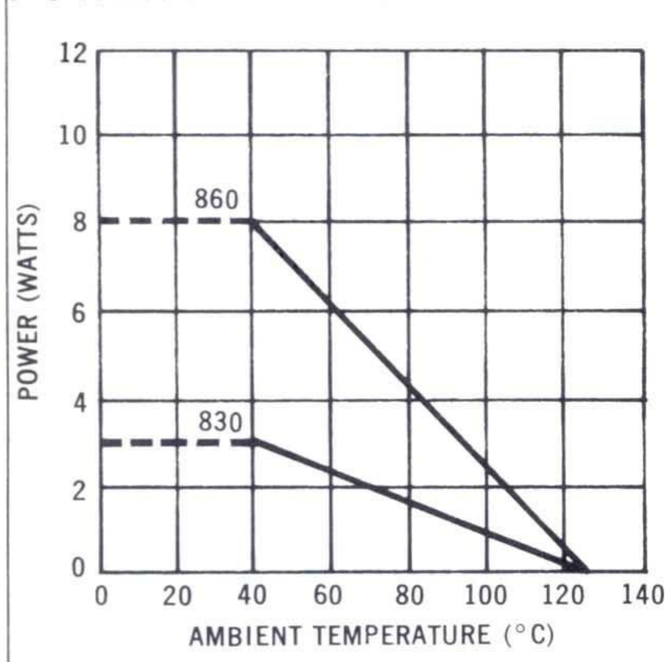


## RESISTANCE ELEMENT DATA

**Model 860**

| RESISTANCE VALUES (OHMS) | RESOLUTION % | OHMS PER TURN | MAX CURRENT AT 40°C AMBIENT (MILLI-AMPS) | MAX VOLTAGE ACROSS COIL (VOLTS) | WIRE TEMP COEF PPM/°C |
|---|---|---|---|---|---|
| 20 | .044 | .009 | 632 | 13 | 800 |
| 50 | .027 | .014 | 400 | 20 | 800 |
| 100 | .024 | .024 | 283 | 28 | 800 |
| 200 | .028 | .056 | 200 | 40 | 180 |
| 500 | .023 | .115 | 126 | 63 | 20 |
| 1K | .018 | .182 | 89 | 89 | 20 |
| 2K | .020 | .402 | 63 | 126 | 110 |
| 5K | .015 | .754 | 40 | 200 | 20 |
| 10K | .013 | 1.23 | 28 | 283 | 20 |
| 20K | .010 | 1.97 | 20 | 400 | 20 |
| 50K | .007 | 3.69 | 13 | 632 | 20 |
| 100K | .007 | 6.51 | 8.9 | 894 | 20 |
| 200K | .005 | 9.63 | 5.0 | 1,000 | 20 |
| 500K | .004 | 20.0 | 2.0 | 1,000 | 20 |

**Model 830**

| RESISTANCE VALUES (OHMS) | RESOLUTION % | OHMS PER TURN | MAX CURRENT AT 40°C AMBIENT (MILLI-AMPS) | MAX VOLTAGE ACROSS COIL (VOLTS) | WIRE TEMP COEF PPM/°C |
|---|---|---|---|---|---|
| 20 | .094 | .019 | 387 | 8 | 800 |
| 50 | .074 | .037 | 245 | 12 | 800 |
| 100 | .071 | .071 | 173 | 17 | 180 |
| 200 | .072 | .145 | 122 | 25 | 20 |
| 500 | .064 | .320 | 77 | 39 | 110 |
| 1K | .050 | .500 | 55 | 55 | 110 |
| 2K | .047 | .948 | 39 | 77 | 20 |
| 5K | .035 | 1.73 | 24 | 125 | 20 |
| 10K | .029 | 2.92 | 17 | 176 | 20 |
| 20K | .024 | 4.80 | 12 | 250 | 20 |
| 50K | .017 | 8.31 | 8 | 375 | 20 |
| 100K | .015 | 14.5 | 5 | 600 | 20 |
| 150K | .013 | 20.0 | 4 | 750 | 20 |

## HOW TO ORDER THE MODELS 830 & 860

The Models 830 and 860 can be ordered from this specification sheet by stating:

1. Model No. (830 or 860)
2. The total resistance of each section, beginning with the section nearest the mounting end. — Example — Model 860 1K/10K 2 sections.
3. The number of sections desired. — Example — Model 860 20K single section.

Other characteristics will be standard as described on this specification sheet. If special characteristics are required such as: special linearity tolerance, special resistance tolerance, extra taps, non-linear functions, etc., please state these on your order.


UNITED TECHNOLOGIES
HAMILTON STANDARD
CONTROLS

**Spectrol Electronics**
17070 E. Gale Avenue
City of Industry, CA 91745, U.S.A.
(818) 964-6565 • TWX (910) 584-1314
FAX 818/810-1093

**Spectrol Reliance Ltd.**
Drakes Way
Swindon, Wiltshire, England
Swindon 21351 • TELEX: 44692
FAX 011-44-793-39255


See page 125, headed "Warranty" the contents of which are made a part hereof and included herein by reference.

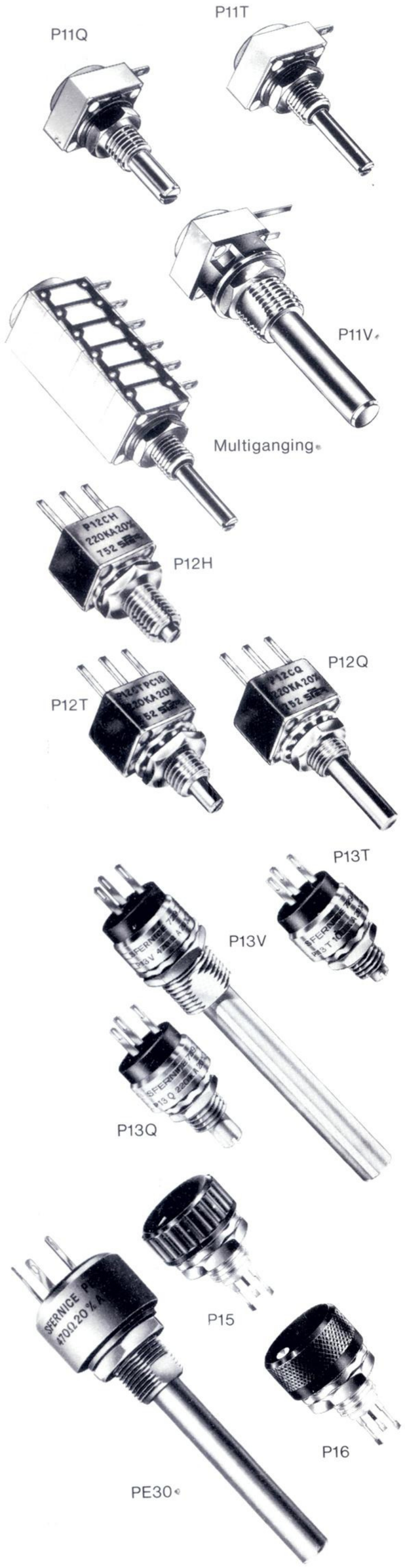


# potentiometers
## quick reference guide

| Series | Resistance element | Mechanical travel | Styles | Applications | CCTU styles | Ø mm Spindle | Ø mm Bush | Spindle length mm (1) | Dimensions mm (inches) | Data sheet nr. | Sealing | Power rating at | Resistance range (2) | Tolerance |
|---|---|---|---|---|---|---|---|---|---|---|---|---|---|---|
| P11 | CERMET | 300° | T | Industrial | | 3 | 6 | K = 9,5<br>M = 12,5<br>R = 22 | 12,5x12,5x9<br>(.492x.492x.354) | 461 | enables cleaning | 1 W 70°C | 22Ω... 4,7MΩ | ±20%<br>±10%<br>± 5% |
| | | | Q | | | 4 | 7 | E = 9,5<br>F = 12,5<br>G = 22 | | | | | | |
| | | | V | | | 6 | 10 | D = 16<br>N = 25<br>S = 50 | 12,5x12,5x11<br>(.492x.492x.433) | | | | | |
| P12 | | 300° | T | Professional and military | P12CTPC18 | 3 | 6 | K = 9,5<br>M = 12,5<br>R = 22 | 12x12x10,2<br>(.472x.472x.402) | 462 | fully sealed container | 1 W 70°C | 22Ω... 10MΩ | ±20%<br>±10% |
| | | | Q | | | 4 | 7 | E = 9,5<br>F = 12,5<br>G = 22 | | | | | | |
| | | | H | | | 3 | 6 | L = 12,5 | | | | | | |
| | | | | | | with spindle locking nut | | | | | | | | |
| P13 | | 300° | T | Professional and military | P13T PC32 | 3 | 6 | K = 9,5<br>M = 12,5<br>R = 22 | Ø12,6x10,5<br>(Ø.496x.413) | 463 | fully sealed container | 1,5 W 70°C | 22Ω... 10MΩ | ±20%<br>±10%<br>± 5% |
| | | | Q | | | 4 | 7 | E = 9,5<br>F = 12,5<br>G = 22 | | | | | | |
| | | | V | | P13V PC33 | 6 | 10 | AC = 16<br>AM = 25<br>AL = 50 | Ø14x10,5<br>(Ø.551x.413) | | | | | |
| P15 | | 300° | | Industrial | | Control Knob | 10 | | Ø16x7,5<br>(Ø.630x.295)<br>Plastic | 466 | fully sealed container | 1 W 40°C | 22Ω... 10MΩ | ±20%<br>±10% |
| P16 | | | | Professional and military | | | 10 | | Ø16x8,5<br>(Ø.630x.335)<br>Aluminium | | | | | |
| PE30 | | 300° | | Professional and military | PE30 PC30 | 6 | 10 | AC = 16<br>AM = 25<br>AL = 50 | Ø20x11,5<br>(Ø.787x.453) | 476 | fully sealed container | 3 W 70°C | 22Ω... 10MΩ | ±20%<br>±10%<br>± 5% |

**TEMPERATURE COEFFICIENT OF RESISTANCE**
Typical temperature coefficient for potentiometers with Cermet track is ±50 ppm/°C for Rn ≥100Ω.

**(1) SPINDLE LENGTH**
The spindle length is measured from mounting plate.
Special spindles on request.

**(2) RESISTANCE RANGE**
Standard ohmic values : E3 series ( 1-2,2-4,7 ) and multiples.
Values according to MIL-R-22097 on request.